http://www.seekway.com.cn/

WH-36C300S User Manual

Jiangmen Seekway Technology Ltd.

2016-3

Overview 1
Technical Parameters 1
Working Environment 1
Transmission Distance 1
Connection Mode 2
Signal Inspection 3
Attention 3

Overview

●Apply to different high-power lamps and lanterns such as washer light, flood light, and etc.
●Standard DMX512 protocol; three channels are used by each module; series-connected with auto addressing.
●Efficient switching driver, wide range of AC voltage input and low heat.
●Connect with an external Seekway controller to achieve variety of full color effects and models.
●Automatically switch between external control mode and internal 7-color gradients.
●Compatible with standard DMX512 console.

Technical Parameters

Driver size：196L×37W×28H（mm）
PCB size (without cover)：147.5L×31W（mm）
Input voltage：AC100V ～ AC240V
Output current：300mA ± 5%
Output power：18 ～ 36W（6～12pcs in series*3 groups）
Maximum power：≤36W
Efficiency：>80%
Gray scale: 256 grade
Connection mode: in series
Transmission protocol：DMX512
Transmission mode：RS485
Addressing mode: Auto
Transmission distance: Can be 100m under good quality network cable
Application: Seekway main controller SW-301-D/SY-304-D/SY-308-D, DMX512 console

Working Environment

Temperature：-40℃ ～ 85℃
Cooling method: natural wind
Material of cover: bright brown aluminum alloy

Transmission Distance

Between modules: Connect AI and BI by one group of twisted pair of network cable (recommend to use the ones in orange and green which are specialized for data transmission). GND can use the other group. It can usually reach 100m.
Between module and lighting fixtures: It should be as short as possible to improve stability of current.

Connection Mode

Power supply input terminal: “L N ⏚”; L is live wire, N is neutral wire, ⏚ is earth wire.

LED output terminal:“VCC R- G- B-”; VCC is positive pole, R- G- B- respectively respond to negative poles of three LED output.

Signal input: Connect AI, BI and ⏚ to A, B and GND of controller or signal output of previous module AO, BO and ⏚ respectively by three-core wire.

Signal output: Connect AO, BO and ⏚ to next signal output terminal AI, BI and ⏚ by three-core wire.

Connection Diagram 1

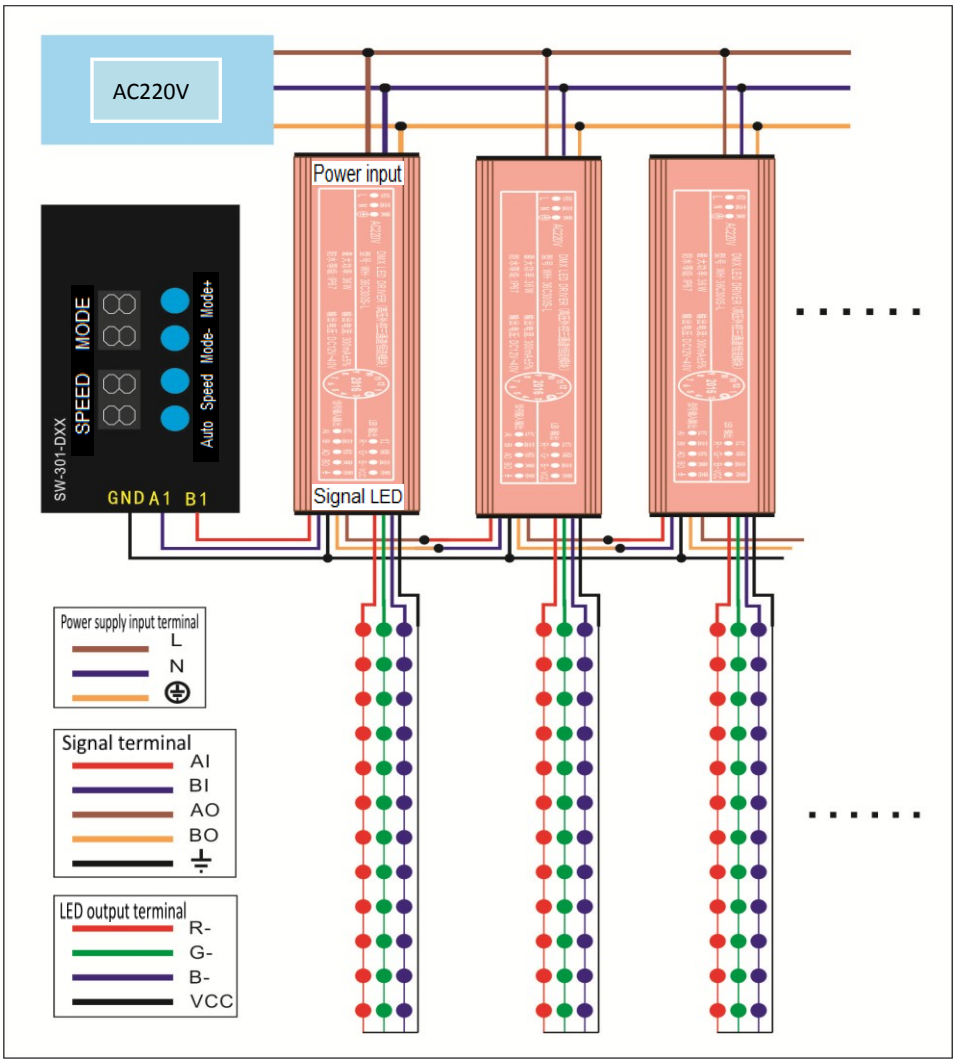

Connection Diagram 2

Signal Inspection

Self-check: Connect the module with lamps and lanterns without connecting main control signal, seven colors keep changing gradually when power on.

Connect with main controller: Lamps and lanterns will be under control when they connect with main controller and power on.

Attention

Recommend to use signal GND to avoid the damage of module caused by PSU quality.

Avoid short circuit between power output wires (VCC with R-, G- or B- respectively) and burn the components of constant current.

If the short circuit between power output wires caused by misoperation, please turn the power off for few seconds and turn on the power again to work properly.

As constant current IC of this product is the sensitive-voltage component, working with power is strictly prohibited; avoid damaging the circuit by static electricity during installation.